Department of Chemistry
Cumulative Examinations
November 15, 2003

You may choose to answer any exam from any area covered in the examination booklet. Each exam may contain multiple parts. You may answer more than one exam but each exam is scored separately and is treated as an individual examination result. Thus, answering parts of two exams with a score of 50% *would not* yield a 100% grade for this cumulative exam. Instead you would receive 50% on each examination attempted.

This booklet contains ***five*** examinations.

1) Analytical Cumulative Examination, Page 1
2) Biochemistry Cumulative Examination, Pages 2-3
3) Inorganic Cumulative Examination, Pages 4-9
4) Organic Cumulative Examination, Page 10
5) Physical Cumulative Examination, Page 11

On your examination booklet:

1) Print your student ID number.
2) Print this Exam Booklet number: _____
3) Print the question number you are answering.
4) Print the Exam Date.

Do not write your name anywhere on the examination booklet. Each exam will be scored anonymously. If you attempt more than one exam, *you must use a separate examination booklet for each examination*.

When you complete the examination, return the examination and your answer booklet to the proctor. Exam results will be posted on bulletin board #2B on the north side of the hall near BRWN 2124.

ANALYTICAL CUME November 15, 2003

Liquid chromatography-mass spectrometry (LC-MS) and LC-MS/MS are currently being used to study very complex mixtures. Samples being examined frequently have 10^5 to 10^6 components that varying three orders of magnitude in concentration. The objective in many cases is to identify and quantify as many of the components in these samples as possible. The questions below relate to some of the problems involved in analyzing very complex mixtures.

1. There is a limit to the number of analytes a mass spectrometer can analyze simultaneously. What determines the analytical capacity (or limits) of a mass spectrometer, how would you predict it, and how could you improve it?

2. Why would the total number of analytes one could see be higher for some mixtures than others? How do the properties of the analytes in the mixture impact the analytical capacity of a mass spectrometer?

3. Liquid chromatography extends the analytical capacity of a mass spectrometer. How does it do this and how much is the analytical limit increased?

4. Adding another separation dimension to either the liquid chromatograph or mass spectrometer increases the analytical capacity of an LC-MS system, but it also increases the amount of time required for the analysis. Which would tend to be faster, LC/LC-MS or LC-MS/MS? Why?

Cumulative Exam
Biochemistry
November 15, 2003

Lipids and Membranes

1. (20 points)

A. You have just cloned and sequenced the gene for a new ATP-dependent transporter that has ATPase activity that is stimulated in the presence of sterols. Given that is a transporter, you believe that it must be a transmembrane protein.

How would you determine the number of times the protein spans the membrane?

B. Briefly describe a procedure for the expression, purification and functional reconstitution of an integral membrane ATP-dependent transporter protein into mixed DOPS/DOPC vesicles. Be sure to include enough information that the experiment could be actually done if all of the small details were added.

C. Devise a simple experiment to determine the % of your molecules that are oriented inside-out in the reconstituted vesicles.

D. How would you determine if the identified transporter is mobile in the plasma membrane of an intact cell?

2. (15 points)

A. A typical biological lipid is 1,2-Dioleoyl-Glycero-3-Phosphocholine (DOPC). Draw this lipid at pH 7.5.

B. Phospholipase A_2 can react with DOPC and remove the acyl chain from the second position. Draw the resultant products from treatment with phospholipase A_2.

C. Phospholipase A_2 is commonly found in snake venom and causes red cell rupture. Which of the products from the reaction of DOPC with phospholipase A_2 would cause the cells to rupture and why?

D. What type of structure would the product that causes the rupture form when dispersed in an aqueous solution, and why?

3. (10 points)

Describe briefly the factors that determine membrane phospholipids asymmetry.

4. (20 points)

Proteins can associate with membranes in numerous ways.

Name **four** ways by which this protein could be associated with a membrane and give an example of a protein for each type of association.

5. (20 points)

A. Describe the dependence of the melting point of a fatty acid upon:

(a) chain length
(b) unsaturation

Explain these dependencies in molecular terms.

B. In cells, fatty acids are stored as triacylglycerols for energy reserves.

(i) Draw the structure of a triacylglycerol molecule with a combination of both saturated and unsaturated fatty acid substituents.
Draw the atoms and name the fatty acids that you used.

(ii) In what type of cells are triacylglycerols stored and in what cellular compartment?

(iii) Define the logic behind cells storing fatty acids as triacylglycerols.

6. (15 points)

A. What is the difference between **facilitated** and **active** membrane transporters?

B. Briefly describe the general three-step mechanism by which a **facilitated transporter** moves a solute from one side of a membrane to another.
Give an example.

Inorganic Chemistry Cumulative Exam

Purdue University
November 15, 2003

There are 100 possible points in this exam.

1. (10 points) The crystal structure of CsCl is shown below. What is the Bravais lattice type of CsCl? Give reasons for your answer. (The 14 Bravais lattices are listed in Attachment A.)

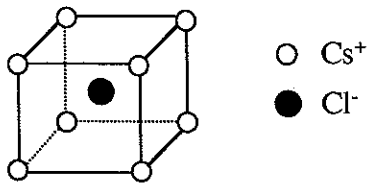

2. (20 points) Write the Miller indices of the following lattice planes.

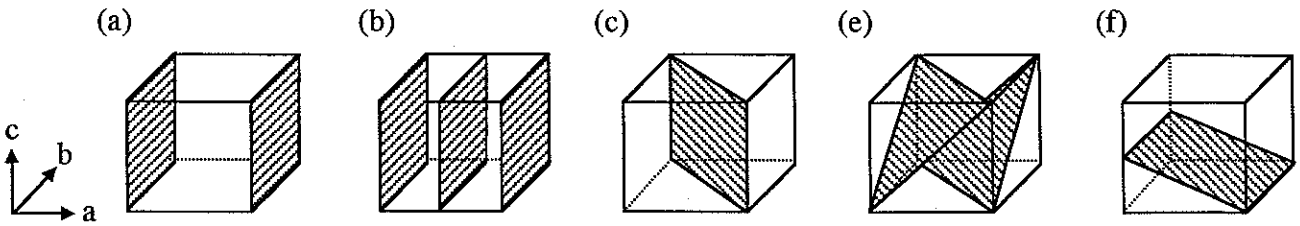

3. (20 points) To which crystal system (triclinic, monoclinic, orthorhombic, tetragonal, cubic, trigonal, hexagonal) must each of the following space groups belong?

(a) C cca (b) I 4/mmm (c) P 2/m (d) P 1

4. (10 points) List the full meaning conveyed by the following space groups.

(a) P 2_1/c (b) I bca

5. (20 points) (a) Explain how you can distinguish a primitive cubic structure from a face-centered cubic structure by X-ray diffraction. (b) What are the first three (hkl) reflections (those of low 2θ values) expected for a primitive cubic structure with no glide planes or screw axes?

6. (10 points) Sodium bicarbonate $NaHCO_3$ is monoclinic ($P\,2_1/c$, a=3.53Å, b=9.70Å, c=8.11Å, β=112.25°) The positional parameters are:

	x	y	z
Na	0.427	0.004	-0.286
C	0.210	0.237	-0.077
O(1)	0.869	0.205	-0.071
O(2)	-0.012	0.163	-0.205
O(3)	-0.504	0.171	-0.940

Consult Attachment B to see what the $P\,2_1/c$ space group looks like. How many $NaHCO_3$ molecules do you expect to see in one unit cell of this structure?

7. (10 points) A plane lattice is an infinite array of points in two dimensions such that every point is identical, having the same surroundings in the same orientation. A unit cell of a plane lattice is a parallelogram of two unit translations with lattice points at each corner and is perfectly representative of the lattice. Draw a unit cell on each of the following 2D patterns and attach the figures to your blue book.

---------- cut ----------

(a)

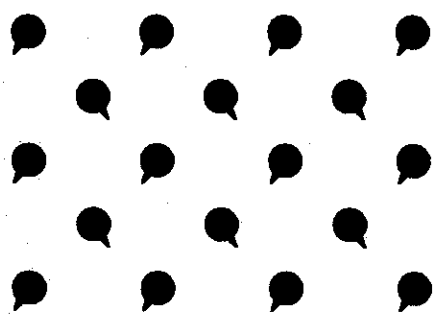

(b)

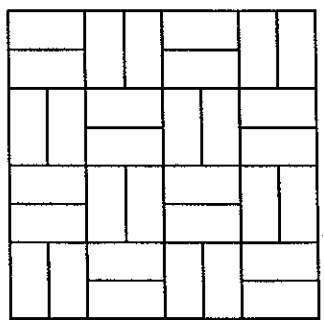

Attachment A.

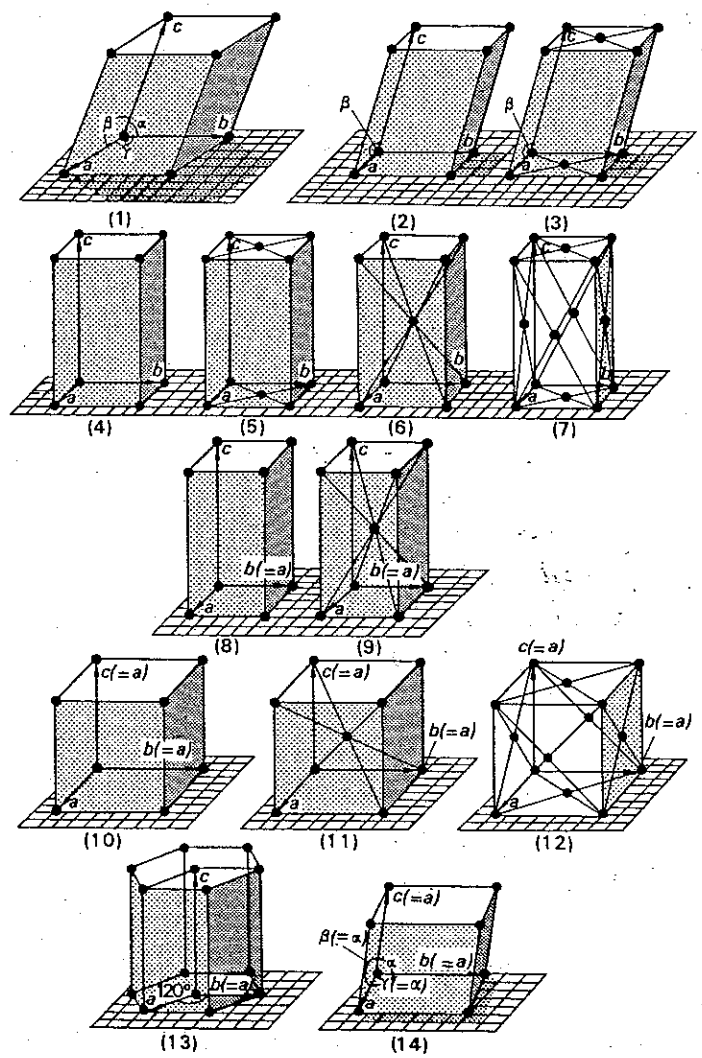

FIGURE 2.4. Unit cells of the 14 Bravais lattices; interaxial angles are 90° unless indicated otherwise by a numerical value or symbol: (1) triclinic *P*, (2) monoclinic *P*, (3) monoclinic *C*, (4) orthorhombic *P*, (5) orthorhombic *C*, (6) orthorhombic *I*, (7) orthorhombic *F*, (8) tetragonal *P*, (9) tetragonal *I*, (10) cubic *P*, (11) cubic *I*, (12) cubic *F*, (13) hexagonal *P*, (14) trigonal *R*. Note that (13) shows three *P* hexagonal unit cells. A hexagon of lattice points (without the central point in the basal planes shown) does not lead to a lattice. Why?

Attachment B.

$P\,2_1/c$ $\quad C_{2h}^5$ $\quad 2/m$ $\quad$ Monoclinic

No. 14 $\quad P\,1\,2_1/c\,1$ $\quad$ Patterson symmetry $P\,1\,2/m\,1$

UNIQUE AXIS b, CELL CHOICE 1

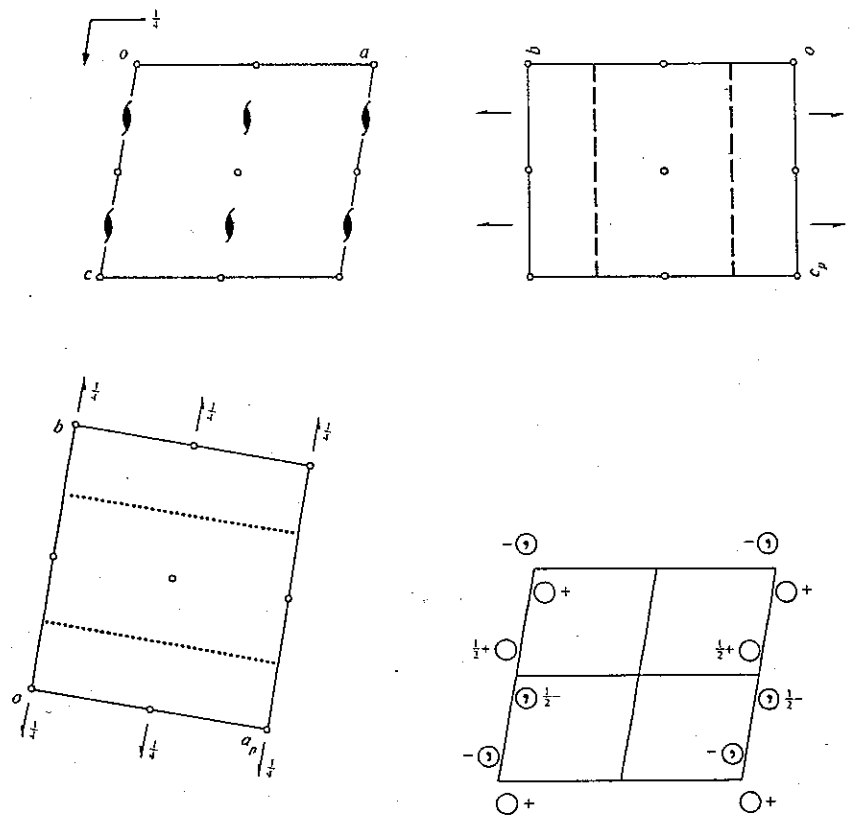

Origin at $\bar{1}$

Asymmetric unit $\quad 0 \le x \le 1;\ \ 0 \le y \le \frac{1}{4};\ \ 0 \le z \le 1$

Symmetry operations

(1) 1 $\quad$ (2) $2(0,\frac{1}{2},0)\ \ 0,y,\frac{1}{4}$ $\quad$ (3) $\bar{1}\ \ 0,0,0$ $\quad$ (4) $c\ \ x,\frac{1}{4},z$

Generators selected (1); $t(1,0,0)$; $t(0,1,0)$; $t(0,0,1)$; (2); (3)

Positions

Multiplicity, Wyckoff letter, Site symmetry			Coordinates				Reflection conditions
							General:
4	e	1	(1) x,y,z	(2) $\bar{x},y+\frac{1}{2},\bar{z}+\frac{1}{2}$	(3) $\bar{x},\bar{y},\bar{z}$	(4) $x,\bar{y}+\frac{1}{2},z+\frac{1}{2}$	$h0l$: $l=2n$ $0k0$: $k=2n$ $00l$: $l=2n$
							Special: as above, plus
2	d	$\bar{1}$	$\frac{1}{2},0,\frac{1}{2}$	$\frac{1}{2},\frac{1}{2},0$			hkl : $k+l=2n$
2	c	$\bar{1}$	$0,0,\frac{1}{2}$	$0,\frac{1}{2},0$			hkl : $k+l=2n$
2	b	$\bar{1}$	$\frac{1}{2},0,0$	$\frac{1}{2},\frac{1}{2},\frac{1}{2}$			hkl : $k+l=2n$
2	a	$\bar{1}$	$0,0,0$	$0,\frac{1}{2},\frac{1}{2}$			hkl : $k+l=2n$

Symmetry of special projections

Along [001] $p2gm$
$\boldsymbol{a}'=\boldsymbol{a}_p$ $\boldsymbol{b}'=\boldsymbol{b}$
Origin at $0,0,z$

Along [100] $p2gg$
$\boldsymbol{a}'=\boldsymbol{b}$ $\boldsymbol{b}'=\boldsymbol{c}_p$
Origin at $x,0,0$

Along [010] $p2$
$\boldsymbol{a}'=\frac{1}{2}\boldsymbol{c}$ $\boldsymbol{b}'=\boldsymbol{a}$
Origin at $0,y,0$

Maximal non-isomorphic subgroups

I $[2]P1 2_1 1\,(P2_1)$ 1; 2
$[2]P\bar{1}$ 1; 3
$[2]P1c1\,(Pc)$ 1; 4

IIa none

IIb none

Maximal isomorphic subgroups of lowest index

IIc $[3]P1 2_1/c 1\,(\boldsymbol{b}'=3\boldsymbol{b})(P2_1/c)$; $[2]P1 2_1/c 1\,(\boldsymbol{a}'=2\boldsymbol{a}$ or $\boldsymbol{a}'=2\boldsymbol{a}, \boldsymbol{c}'=2\boldsymbol{a}+\boldsymbol{c})(P2_1/c)$

Minimal non-isomorphic supergroups

I $[2]Pnna$; $[2]Pmna$; $[2]Pcca$; $[2]Pbam$; $[2]Pccn$; $[2]Pbcm$; $[2]Pnnm$; $[2]Pbcn$; $[2]Pbca$; $[2]Pnma$; $[2]Cmca$

II $[2]C1 2/c 1\,(C2/c)$; $[2]A1 2/m 1\,(C2/m)$; $[2]I1 2/c 1\,(C2/c)$; $[2]P1 2_1/m 1\,(2\boldsymbol{c}'=\boldsymbol{c})(P2_1/m)$; $[2]P1 2/c 1\,(2\boldsymbol{b}'=\boldsymbol{b})(P2/c)$

Periodic Classification of the Elements

I A	II A	III B	IV B	V B	VI B	VII B	VIII			I B	II B	III A	IV A	V A	VI A	VII A	O
1 H 1.00797																	2 He 4.0026
3 Li 6.939	4 Be 9.0122											5 B 10.811	6 C 12.01115	7 N 14.0067	8 O 15.9994	9 F 18.9984	10 Ne 20.183
11 Na 22.9898	12 Mg 24.312											13 Al 26.9815	14 Si 28.086	15 P 30.9738	16 S 32.064	17 Cl 35.453	18 Ar 39.948
19 K 39.102	20 Ca 40.08	21 Sc 44.956	22 Ti 47.90	23 V 50.942	24 Cr 51.996	25 Mn 54.9380	26 Fe 55.847	27 Co 58.9332	28 Ni 58.71	29 Cu 63.54	30 Zn 65.37	31 Ga 69.72	32 Ge 72.59	33 As 74.9216	34 Se 78.96	35 Br 79.909	36 Kr 83.80
37 Rb 85.47	38 Sr 87.62	39 Y 88.905	40 Zr 91.22	41 Nb 92.906	42 Mo 95.94	43 Tc (99)	44 Ru 101.07	45 Rh 102.903	46 Pd 106.4	47 Ag 107.870	48 Cd 112.40	49 In 114.82	50 Sn 118.69	51 Sb 121.75	52 Te 127.60	53 I 126.9044	54 Xe 131.30
55 Cs 132.905	56 Ba 137.34	57 La* 138.91	72 Hf 178.49	73 Ta 180.948	74 W 183.85	75 Re 186.2	76 Os 190.2	77 Ir 192.2	78 Pt 195.09	79 Au 196.967	80 Hg 200.59	81 Tl 204.37	82 Pb 207.19	83 Bi 208.980	84 Po (210)	85 At (210)	86 Rn (222)
87 Fr (223)	88 Ra (226)	89 Ac† (227)															

*Lanthanides	58 Ce 140.12	59 Pr 140.907	60 Nd 144.24	61 Pm (147)	62 Sm 150.35	63 Eu 151.96	64 Gd 157.25	65 Tb 158.924	66 Dy 162.50	67 Ho 164.930	68 Er 167.26	69 Tm 168.934	70 Yb 173.04	71 Lu 174.97
†Actinides	90 Th 232.038	91 Pa (231)	92 U 238.03	93 Np (237)	94 Pu (242)	95 Am (243)	96 Cm (247)	97 Bk (247)	98 Cf (249)	99 Es (254)	100 Fm (253)	101 Md (256)	102 No (256)	103 Lw (257)

(Numbers in parentheses are the mass numbers of the most stable isotopes.)

Organic
Cumulative Exam

November 2003

Define and/or give an example of the following (**answer 20/25**)...

---

a. Structure of adamantane.

b. Describe a method to resolve 2-methylpropionic acid.

c. An element which is a liquid at 25°C (P= 1 atm)

d. LD_{50}

e. Structure of azulene

f. Claisen rearrangement

g. Mechanism of Staudinger reaction.

h. University affiliation of 5 non-Indiana organic Faculty members.

i. Draw an example of a vinylogous ester.

j. What is the energy difference between two materials in equilibrium (25°C) if their ratio is 99:1?

k. An indole synthesis (give mech)

l. Non-REDOX protection of a carboxylic acid which will not undergo reaction with MeLi at -50°C

m. Draw ^{1}H NMR of 1,2 dibromoethane (assume all J=7Hz)

n. An achiral compound having 3 chiral centers.

o. Structure of an amidine base, such as DBU.

p. Show example of the Simmons-Smith reaction.

q. What is N-hydroxy succinimide used for?

r. What is N-Bromo succinimide used for?

s. Who was Robert Benkesser & what known for?

t. How does AZT interfere with the AIDS virus?

u. A synthesis of diazomethane (mech)

v. Draw the proton NMR spectra of hexafluoroisopropanol.

w. Draw mass spectra of parent region of dibromomethane.

x. What are the 3 most abundant elements on Earth? (any order)

y. What is the strength of the C-C bond of ethane (±5 Kcal)?

All of the questions relate to the problem of a one-dimensional oscillator for which the spring constant is k=1 and the mass is m=1. The oscillator is similar to a harmonic oscillator but with an additional potential term. Its Hamiltonian is

$$H = \frac{p^2}{2} + \frac{x^2}{2} + 4x^4$$

In a basis of eigenfunctions of the Hamiltonian of a *harmonic* oscillator with k=1, m=1 and in a system of units where Planck's constant ("h-bar") is 1, the matrix representation of the operator x is:

$$X = \frac{1}{\sqrt{2}} \begin{pmatrix} 0 & 1 & 0 & 0 & 0 & \cdots \\ 1 & 0 & \sqrt{2} & 0 & 0 & \cdots \\ 0 & \sqrt{2} & 0 & \sqrt{3} & 0 & \cdots \\ 0 & 0 & \sqrt{3} & 0 & \sqrt{4} & \cdots \\ 0 & 0 & 0 & \sqrt{4} & 0 & \end{pmatrix}$$

The matrix representation of p^2 is

$$p^2 = \frac{1}{2} \begin{pmatrix} 1 & 0 & -\sqrt{2} & 0 & 0 & 0 & \cdots \\ 0 & 3 & 0 & -\sqrt{6} & 0 & 0 & \cdots \\ -\sqrt{2} & 0 & 5 & 0 & -\sqrt{12} & 0 & \cdots \\ 0 & -\sqrt{6} & 0 & 7 & 0 & -\sqrt{20} & \cdots \end{pmatrix}$$

(30) **1.** Using only the above information—and show your work to make that clear—find the matrix representations in the same basis of the operators x^2, x^4, and then H (first four rows and first four columns are enough).

(25) **2.** In a truncated basis consisting of the first three functions in the given basis, find the variational energies of the three states.

(25) **3.** Partition the Hamiltonian from Prob. 2 (truncated basis) into a zero order part and a perturbation. Indicate your partitioning and then find the 2nd order energy correction for the lowest state. Also find the first order correction to the wavefunction of the lowest energy state.

(20) **4.** If $\psi_0^{(0)}$ is the zero order ground state wavefunction, $\psi_0^{(1)}$ is the first order correction to the ground state, and ψ_0^{var} is the variational wavefunction for the ground state obtained in Prob. 2, find $< \psi_0^{(0)} + \psi_0^{(1)} \mid \psi_0^{var} >$. Explain what you think the resulting value indicates.